UNIVERSITAS BUDI LUHUR
FAKULTAS EKONOMI DAN BISNIS – PROGRAM STUDI ILMU MANAJEMEN (S3)
PROGRAM STUDI MANAJEMEN (S2) | AKUNTANSI (S2)
MANAJEMEN (S1) | AKUNTANSI (S1) | SEKRETARI (D3) | MANAJAJEMEN BENCANA (S1) PARIWISATA (S1)
Kampus Pusat: Jl. Ciledug Raya - Petukangan Utara - Jakarta Selatan 12260
Telp : 021-5853753 (hunting), Fax : 021-5853489, http://www.budiluhur.ac.id

KEPUTUSAN DEKAN FAKULTAS EKONOMI DAN BISNIS
UNIVERSITAS BUDI LUHUR
NOMOR : K/UBL/FEB/000/047/09/24

TENTANG :

PENUGASAN KEGIATAN TRI DHARMA & PENUNJANG BAGI DOSEN
FAKULTAS EKONOMI DAN BISNIS UNIVERSITAS BUDI LUHUR
SEMESTER GASAL TAHUN AKADEMIK 2024/2025

DEKAN FAKULTAS EKONOMI DAN BISNIS UNIVERSITAS BUDI LUHUR

Menimbang :
1) Bahwa Dosen adalah pendidik profesional dan ilmu dengan tugas utama mentrans-formasikan, mengembangkan, dan menyebarluaskan ilmu pengetahuan, teknologi, dan seni melalui pendidikan/pengajaran penelitian & karya ilmiah, dan Pengabdian pada masyarakat yang dikenal dengan istilah Tri Dharma Perguruan Tinggi;
2) Bahwa untuk meningkatkan profesionalitas dan kompetensi sebagai pendidik professional maka dipandang perlu untuk memberikan tugas-tugas tambahan/penunjang dalam lingkup kegiatan penunjang Tri Dharma;

Mengingat :
1) Undang-undang No. 20 tahun 2003 tentang Sistem Pendidikan Nasional;
2) Undang-undang No. 12 tahun 2012 tentang Pendidikan Tinggi;
3) Peraturan Pemerintah (PP) Nomor 57 Tahun 2021 tentang Standar Nasional Pendidikan Nasional;
4) Peraturan Menteri Pendidikan dan Kebudayaan Republik Indonesia Nomor 3 tahun 2020 tentang Standar Nasional Pendidikan Tinggi;
5) Statuta Universitas Budi Luhur.
6) Keputusan Pengurus Yayasan pendidikan Budi Luhur Cakti Nomor K/YBLC/KET/000/020/001/24 tentang pengangkatan Saudara Prof. Dr. Drs. Selamet Riyadi, M.Si sebagai Dekan Fakultas Ekonomi dan Bisinis Universitas Budi Luhur.

MEMUTUSKAN

Menetapkan :

PERTAMA : Menugaskan dosen-dosen Fakultas Ekonomi dan Bisnis Universitas Budi Luhur untuk melaksanakan kegiatan **Tri Dharma Perguruan Tinggi dan penunjangnya** pada Semester Gasal Tahun Akademik 2024/2025 yang meliputi:
a) **Kegiatan partisipasi aktif** dalam Pertemuan Ilmiah sebagai Ketua/Anggota/Peserta/Pembicara/Penulis/Narasumber pada kegiatan Seminar, Workshop, Konferensi, Pelatihan, Simposium, Lokakarya, Forum Diskusi, Sarasehan dan sejenisnya;
b) **Publikasi Ilmiah** pada Prosiding, Jurnal/majalah/surat kabar dan sejenisnya;
c) **Partisipasi dalam organisasi** profesi, organisasi keilmuan dan/atau organisasi lain yang menunjang kegiatan Tri Dharma Pendidikan Tinggi;
d) **Pengabdian Kepada Masyarakat (PPM)**, dalam kegiatan terprogram, terjadwal atau insidental;

KEDUA : Dosen-dosen yang melaksanakan penugasan wajib membuat Laporan Kegiatan, dengan mengikuti pedoman dari Fakultas/Program Studi, sebagai pertanggungjawaban atas kegiatan yang diikuti;

KETIGA : Kegiatan Tri Dharma yang tidak termasuk dalam surat keputusan ini akan memiliki penugasan tersendiri;

KEEMPAT : Keputusan ini berlaku sejak tanggal ditetapkan dan akan diubah sebagaimana mestinya apabila di kemudian hari terdapat kekeliruan.

Ditetapkan di : Jakarta
Pada Tanggal : 2 September 2024
==========
Dekan Fakultas Ekonomi dan Bisnis

Prof. Dr. Drs. Selamet Riyadi, M.Si

KAMPUS ROXY : Pusat Niaga Roxy Mas Blok E.2 No. 38-39 Telp : 021 6328709 - 6328710, Fax : 021-6322872
KAMPUS SALEMBA : Sentra Salemba Mas Blok S-T, Telp : 021 3928688 - 3928689, Fax : 021-3161636

Lampiran 1 Surat Keputusan Dekan
Nomor : K/UBL/FEB/000/047/09/24
Tentang : Nama–Nama Dosen Fakultas Ekonomi Dan Bisnis Universitas Budi Luhur Yang Ditugaskan Melaksanakan Kegiatan Tri Dharma Perguruan Tinggi Semester Gasal Tahun Akademik 2024/2025

No.	NIP	NIDN	Nama Dosen	Program Studi
1	160059	0302126803	Etty Susilowati	Magister Manajemen
2	180015	0508056201	Hamin	Magister Manajemen
3	100025	0305056002	Heni Iswati	Magister Manajemen
4	120072	0304017502	Ifan Haryanto	Magister Manajemen
5	010046	9903016502	Mu' man Nuryana	Magister Manajemen
6	100031	0304036702	Nora Andira Brabo	Magister Manajemen
7	210009	0301035601	Selamet Riyadi	Magister Manajemen
8	840002	0013116003	Setyani Dwi Lestari	Magister Manajemen
9	990026	8826823420	Suhartono	Magister Manajemen
10	220009	0314046502	Sundari Soekotjo	Magister Manajemen
11	000047	0304077102	Amir Indrabudiman	Magister Akuntansi
12	120060	0325116103	Ali Sandy Mulya	Magister Akuntansi
13	170020	0317087801	Agoestina Mappadang	Magister Akuntansi
14	840008	0327078702	Puspita Rani	Magister Akuntansi
15	230016	0329118901	Riyan Harbi Valdiansyah	Magister Akuntansi
16	980013	0331077801	Agus Sriyanto	Manajemen (S1)
17	980007	0310107404	Aris Wahyu Kuncoro	Manajemen (S1)
18	140012	0315057904	Astrid Dita Meirina Hakim	Manajemen (S1)
19	970021	0302047102	Dwi Kristanto	Manajemen (S1)
20	240035	0321067504	Deden Kurniawan	Manajemen (S1)
21	110045	0313038106	Elizabeth	Manajemen (S1)
22	180052	0317058406	Eryco Muhdaliha	Manajemen (S1)
23	170091	0313068909	Farida Ayu Avisena Nusantari	Manajemen (S1)
24	190027	0328027309	Feby Lukito Wibowo	Manajemen (S1)
25	120099	0330057401	Hakam Ali Niazi	Manajemen (S1)
26	930005	0312023001	Hari Subagio	Manajemen (S1)
27	130032	0315117204	Hasan Ipmawan	Manajemen (S1)
28	099038	0301047702	Idris	Manajemen (S1)
29	160025	0301129102	Ivo Rolanda	Manajemen (S1)
30	210028	0311079701	Justin Bongsoikrama	Manajemen (S1)
31	000030	8918710021	Kartini Istikomah	Manajemen (S1)
32	050024	0313037706	Koen Hendrawan	Manajemen (S1)
33	910024	0319056401	Marsin	Manajemen (S1)
34	130045	0301076603	Maulida Khiatuddin	Manajemen (S1)
35	110044	0016126606	Maruji Pakpahan	Manajemen (S1)
36	000022	0302045901	Mia Laksmiwati	Manajemen (S1)
37	120037	0316096101	Muhammad Jusman Syah	Manajemen (S1)
38	920023	0311056701	Pambuko Naryoto	Manajemen (S1)
39	180051	0307037004	Panca Maulana	Manajemen (S1)
40	130052	0308028202	Qodariah	Manajemen (S1)

No.	NIP	NIDN	Nama Dosen	Program Studi
41	160024	0328087904	Ravindra Safitra Hidayat	Manajemen (S1)
42	160045	0301119201	Retno Fuji Oktaviani	Manajemen (S1)
43	130046	0303098103	Rina Ayu Vildayanti	Manajemen (S1)
44	900029	0329057305	Said	Manajemen (S1)
45	920005	0021026601	Slamet Mudjijah	Manajemen (S1)
46	030570	0309038404	Sugeng Priyanto	Manajemen (S1)
47	990026	8826823420	Suhartono	Manajemen (S1)
48	950022	0310076901	Syaiful Anwar	Manajemen (S1)
49	940005	0313107101	Widi Wahyudi	Manajemen (S1)
50	050029	0306047502	Yugi Setyarko	Manajemen (S1)
51	970009	0306067002	Yuni Kasmawati	Manajemen (S1)
52	120092	0324126804	Yuphi Handoko	Manajemen (S1)
53	000017	0325066804	Zulvia Khalid	Manajemen (S1)
54	080053	0303048501	Anissa Amalia Mulya	Akuntansi (S1)
55	090018	0302128603	Desy Anggraeni	Akuntansi (S1)
56	020029	0429118301	Desy Mariani	Akuntansi (S1)
57	030002	0329076801	Dicky Arisudhana	Akuntansi (S1)
58	870018	0303066805	Endah Sri Wahyuni	Akuntansi (S1)
59	130031	0326067801	Indah Rahayu Lestari	Akuntansi (S1)
60	980009	0307018004	Martini	Akuntansi (S1)
61	000039	0301117604	Muhammad Nuur Farid Thoha	Akuntansi (S1)
62	080054	0313018601	Prita Andini	Akuntansi (S1)
63	090011	0312026907	Rachmat Arif	Akuntansi (S1)
64	960024	0303057504	Rinny Meidiyustiani	Akuntansi (S1)
65	010024	0307087706	Rismawandi	Akuntansi (S1)
66	090004	0302037205	Sri Rahayu	Akuntansi (S1)
67	160048	0306048903	Suryani	Akuntansi (S1)
68	150013	0301098801	Tio Prasetio	Akuntansi (S1)
69	160037	0326059401	Triana Anggraini	Akuntansi (S1)
70	020068	0305078001	Wahyumi Ekawanti	Akuntansi (S1)
71	160019	0308089401	Wulan Dwi Antari	Akuntansi (S1)
72	970028	0424097802	Wuri Septi Handayani	Akuntansi (S1)
73	070013	0305098102	Didik Hariyadi Raharjo	Manajemen Bencana (S1)
74	220051	8955170023	Abdul Haris Achadi	Manajemen Bencana (S1)
75	230013	0323049701	Hayatul Khairul Rahmat	Manajemen Bencana (S1)
76	160031	0316059204	Taqwa Putra Budi Purnomo Sidi	Manajemen Bencana (S1)
77	220017	0309049502	Fathin Aulia Rahman	Manajemen Bencana (S1)
78	220044	0412058903	Ayu Wahyuningtyas	Manajemen Bencana (S1)
79	040001	0316127702	Doddy Wihardi	Pariwisata (S1)
80	130028	-	Debi Rusmiati	Pariwisata (S1)
81	240033	-	Gusti Panca	Pariwisata (S1)
82	240026	-	Ghifary Ramandhan	Pariwisata (S1)
83	240034	-	Jasmine Qur'ani	Pariwisata (S1)
84	130048	0321038301	Achmad Syarif	Sekretari (D3)
85	140042	0320086902	Fenti Sofiani	Sekretari (D3)

NO	NIP	NIDN	Nama Dosen	Program Studi
86	990019	0302017401	Iis Torisa Utami	Sekretari (D3)
87	070022	0318098501	Reni Hariyani	Sekretari (D3)
88	150045	0321038903	Rizky Eka Prasetya	Sekretari (D3)

Ditetapkan di : Jakarta
pada Tanggal : 2 September 2024

Dekan Fakultas Ekonomi dan Bisnis
Universitas Budi Luhur

Prof. Dr. Drs. Selamet Riyadi, M.Si

International Journal of Contemporary Accounting ISSN 2685-8568 Online
Vol. 6 No. 2 December 2024 : 181-200 ISSN 2685-8576 Print
Doi: http://dx.doi.org/10.25105/ijca.v6i2.21414

PRIME LENDING RATE AND BANK PERFORMANCE: EVALUATION OF CREDIT QUALITY IN EMERGING COUNTRY

Muhammad Karim[1], Desi Novitasari[2], Riyan Harbi Valdiansyah[3*], Roro Lonita Lorensa[4]
[1,2,3]Master of Accounting, Faculty of Economics and Business, Budi Luhur University, Jakarta, Indonesia
[4]Master of Business Administration, Central Queensland University, Queensland, Australia
*Email: rvaldiansyah@budiluhur.ac.id

Abstract

This study investigates the impact of the prime lending rate on credit quality and its subsequent effect on banking performance (LDR, ROA, NIM) in Indonesia. This quantitative study encompasses 43 conventional banks listed on the Indonesia Stock Exchange (IDX) between 2019 and 2023, with 215 data points. The originality of this study lies in its examination of the direct and indirect effects of credit quality on the relationship between the prime lending rate and banking performance. The data were analyzed using the mediation regression method with panel data, using EViews 13.0 employed for this purpose. The results of the study demonstrate that PLR has a positive effect on credit quality (NPL) and LDR, but a negative effect on ROA, and no effect on NIM. Conversely, NPL exerts a negative influence on LDR, ROA, and NIM. The mediation test revealed that PLR has a negative effect on LDR, ROA, and NIM through NPL. Ultimately, the findings suggest that banking practitioners should exercise caution when pursuing high net interest margin (NIM), return on assets (ROA), and loan-to-deposit (LDR) ratios. Instead, a more prudent approach to extending credit is recommended to maintain the NPL ratio below 5%. This approach contributes to the sustained financial stability of the banking institutions under consideration. For policymakers, the study offers insights into the broader effects of interest rate changes on banking stability and credit quality in emerging markets. Financial regulators, such as Bank Indonesia, could utilize these findings to develop policies that balance economic growth objectives with financial stability. For instance, they could implement measures to maintain NPLs below critical thresholds during periods of fluctuating interest rates. These implications encourage a balanced approach to managing interest rates, focusing on credit quality, and maintaining consistent performance to ensure long-term financial stability.

Keywords: **Prime Lending Rate, Credit Quality, Non-performing Loan, Bank Performance, Emerging Country**

JEL Classification: G21, G28, M41, M48

Submission date:07-10-2024 Revised date: 27-10-2024 Accepted date: 20-11-2024
**Corresponding author*

INTRODUCTION

Prime lending rates in emerging markets significantly influence bank performance because of their direct impact on loan pricing, credit availability, and profitability. In countries such as Indonesia and other emerging economies, changes in the prime lending rate driven by monetary policy adjustments affect the cost of borrowing for businesses and consumers. When prime lending rates increase, banks typically experience reduced demand for loans, as higher borrowing costs deter investment and consumption, leading to decreased bank profitability (Central Bank of Indonesia, 2024). This, in turn, impedes banks' ability to expand credit and increases the likelihood of non-performing Loans (NPLs), particularly under challenging economic conditions. The prime lending rate is crucial, as it establishes a baseline for other interest rates in the economy, impacting both consumer and corporate lending. For banks, higher rates signify increased costs for obtaining capital, which can compress margins unless they transfer the costs to borrowers, potentially reducing the demand. This dynamic is evident in Indonesia's 2024 economic outlook, where economic growth remains resilient despite global uncertainties, but rising interest rates could impede loan growth and strain bank profitability if inflation and financial risks persist (Modugu & Dempere, 2022).

Moreover, emerging markets often face structural challenges, such as the weaker transmission mechanisms of monetary policy, which complicate how changes in lending rates affect bank operations. For instance, banks in these countries often have lower levels of capital adequacy, rendering them more vulnerable to shifts in lending rates and reducing their ability to absorb shocks such as higher NPL ratios. In the case of sub-Saharan Africa, studies have demonstrated that lending and balance sheet channels are critical, but can be disrupted by adverse economic conditions and weak institutional environments (Modugu & Dempere, 2022). Overall, as observed in various emerging countries, including ASEAN nations, the interaction between prime lending rates, credit growth, and banking stability is complex and often exacerbated by external financial conditions and internal market inefficiency (Goyal et al., 2023).

Furthermore, an analysis of the Indonesian Banking Statistics from June 2024 reveals a decline in bank performance, as reflected in the Return on Assets (ROA) and Net Interest Margin (NIM). These metrics decreased from 2.73% and 4.8% in June 2023, to 2.66% and 4.57%, respectively. Conversely, the loan-to-deposit ratio (LDR) increased from 82.76% to 85.74%. The bank's average Prime Lending Rate (PLR) declined from 9.65% in January 2024 to 9.53% in June 2024, which contributed to a reduction in the NPL ratio from 2.26% in June 2024 to 2.44% in June 2023. The decline in PLR and NPL resulted in a decline in ROA and NIM, while LDR increased in the short term (last year).

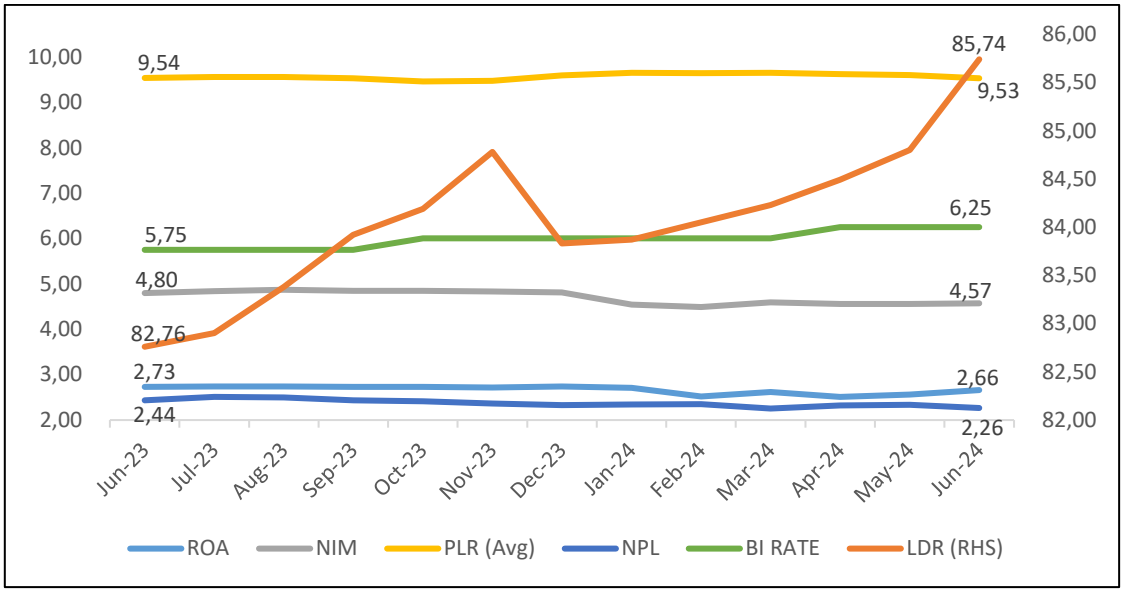

Source : Indonesian Banking Statistics – June 2024 (https://ojk.go.id/en/kanal/perbankan/data-dan-statistik/statistik-perbankan-indonesia/default.aspx

Figure 1. Financial Performance, Prime Lending Rate, Indonesian Central bank Rate and NPL of Banks in Indonesia period June 2023 – June 2024 (%)

Ekanayake and Azeez (2015) demonstrate a positive correlation between prime lending rates and NPLs, indicating that elevated lending rates can precipitate an increase in the level of NPLs. This is consistent with the findings of Khouangvichit (2024), who indicates that lending rates have a positive and significant effect on long-term NPLs. Similarly, Nadham and Nahid (2015) indicate that interest rates influence NPLs.

A decline in PLR results in the effective disbursement of credit, with the growth in total credit disbursements exceeding that of total third-party funds. Consequently, the profitability of the bank increases, leading to an increase in ROA (Bhattarai, 2017; Oriavwote & Oyovwi, 2014) and an increase in the net interest margin (Klein, 2020; Kristyono, 2019; Hoang-Trung & Vu Thi Dan, 2015; Putri & Yafiz, 2023). Furthermore, interest rates have a significant positive influence on inflation. This implies that higher interest rates may reduce the propensity to borrow, which could potentially impact the LDR (Chantha et al., 2024; Dewianawati et al., 2022). Additional research has also identified a significant relationship between interest rates and loan repayments, indicating that changes in interest rates on loans can impact the credit quality portfolios, and consequently, the LDR (Ogundipe et al., 2020).

The ratio of NPLs indicates the level of problematic loans held by the bank. A high NPL ratio will result in a reduction in the bank's interest income (Nugrahaning & Wahyudi, 2016). The presence of NPL on a bank's balance sheet can have a detrimental impact on its NIM, which is a measure of the difference between a bank's interest income and the interest paid to lenders relative to its interest-bearing assets (Endri *et al.*, 2020). Previous research has indicated that NPL has a negative effect on NIM. This indicates that an increase in NPLs can result in a reduction in a bank's net interest margin (NIM)

(Endri et al., 2020), return on assets (ROA) (Wahyuni *et al*., 2023) and loan-to-deposit ratio (LDR) (Kesaulya *et al*., 2021).

This study employs data from the Indonesian banking sector, as evidenced by data from the Indonesian Central Bank, which indicates that the banking sector controls approximately 79% of the total assets across the entire financial industry. Consequently, banking system failure would have a significant impact on the Indonesian economy. Banks are business entities that rely on public funding for operational activities. Consequently, the continued operation of banks is contingent on the continued existence of public trust. A decline in confidence would result in systemic banking failure with the potential to cause an economic crisis (Jazmiyanti *et al*., 2024).

The originality of this study lies in the utilization of contemporary banking data up to 2023, and in examining the direct and indirect effects of credit quality on the relationship between the prime lending rate and banking performance. The objective of this study is to elucidate the direct effect of the basic lending rate on banking performance, as well as the indirect effect of credit interest rates on banking performance, mediated by credit quality. This study aims to provide a valuable source of information and reference and contribute to a comprehensive understanding of the impact of credit interest rates on banking performance, mediated by credit quality. Furthermore, this research endeavors to serve as a reference point or comparison for future studies and as a basis for consideration by banking management in decision-making regarding financial performance and credit provision. Considering the background, the researcher is motivated to investigate to examine the effect of the Prime Lending Rate on the performance of banking institutions, mediated by credit quality.

LITERATURE REVIEW

Legitimacy Theory

Legitimacy theory focuses on the interactions between a company and the public. This theory posits that organizations are part of society and, as such, must observe social norms. Compliance with these norms can render organizations more legitimate. Ghozali and Chariri (2022) posit that the foundation of the legitimacy theory is a social contract between corporations and the communities in which they operate and utilize economic resources. Consequently, legitimacy provides a means to support the continued viability of a company.

Legitimacy theory is often considered effective in explaining the association between prime lending rates, credit quality, and bank performance because it emphasizes the need for banks to align with societal expectations and values to maintain their legitimacy. According to legitimacy theory, organizations (including banks) must act in a manner that reflects societal norms, as public approval is vital for sustaining operations and market positioning. This theory posits that banks are more likely to adjust lending rates and improve credit quality to ensure public confidence and trust in their financial stability, which can, in turn, boost their performance. By managing their prime lending rates and credit standards within socially acceptable limits, banks demonstrate their accountability, which is crucial for retaining their legitimacy among stakeholders. As

banks maintain stable and ethical lending practices, they foster improved credit quality and, consequently, bolster performance, thus reinforcing a positive public image and legitimacy (Deegan, 2019).

The research findings indicate that five variables were investigated. These are the base prime lending rate (PLR), which serves as the independent variable; the quality of credit (NPL), which acts as a mediator; and the financial performance of the banking sector, represented by the loan-to-deposit ratio (LDR), return on assets (ROA), and net interest margin (NIM), which function as dependent variables. Therefore, the underlying theoretical framework of this study is legitimacy theory, which posits that organizations must comply with prevailing regulations. In this regard, banking institutions are obligated to adhere to the quality standards set forth in POJK No. 40 of 2019 (Indonesian Financial Services Authority, 2019). Furthermore, in accordance with Bank Indonesia Regulation No. 17/11/PBI/2015, financial institutions were required to maintain a NPL ratio of no more than 5% of the total credit portfolio. Should banking institutions exceed the 5% threshold for NPL, they are classified as subject to intensive supervision.

Bank Performance

The study conducted by Souza *et al.,* (2017) identified the most relevant indicators for evaluating bank performance as return on total investment, net margin, return on equity, ratio of capital to deposits, loan-to-deposit ratio, immediate liquidity, voluntary fit, and interest rate sensitivity. An analysis of profitability can be used to measure the performance of a given company (Fadhillah *et al.,* 2024). Return on Asset (ROA) is a financial ratio that indicates the profitability of a company's assets (Maulana *et al.,* 2024). A higher ROA indicates a bank’s greater profitability (Pham & Le, 2024; Bazimya & Erorita, 2024). This is attributable to increased return on assets.

Conversely, the Net Interest Margin (NIM) is the ratio used to calculate profitability. The NIM ratio is employed to assess the capacity of banking management in the prudent management of productive assets with the objective of generating net interest income (Yao *et al.,* 2018; De Silva *et al.,* 2020; Putri & Yafiz, 2023). The Net Interest Margin (NIM) was calculated by comparing net interest income to average productive assets. The purpose of this ratio is to evaluate the ability of bank management to manage productive assets to generate net interest income. A higher NIM indicates greater effectiveness in the placement of productive assets to increase profitability.

In addition to profitability ratios, banks employ liquidity ratios to assess their banking performance. The most frequently used liquidity ratio is the loan-to-deposit ratio (LDR). LDR is a ratio used to assess a bank's capacity to meet short-term liquidity obligations and is calculated by dividing total loans by total third-party funds. LDR is a common metric used by companies to assess a bank's liquidity. A high LDR ratio indicates that a greater proportion of funds are allocated to borrowers than deposits or savings accounts (Awalludin *et al.,* 2023).

The effect of Prime Lending Rates (PLR) to Non-Performing Loans (NPL)

Legitimacy theory posits that organizations endeavor to operate within the confines of and in accordance with the norms of the societies in which they are situated. This ensures that external stakeholders perceive their activities as legitimate. In the context of the prime lending rate and its impact on NPL, this theory suggests that banks adjust their prime lending rate to align with societal expectations and economic conditions to maintain legitimacy. However, the relationship between the main credit interest rates and NPLs is highly complex and is influenced by a range of macroeconomic factors and specific banking factors (Umaternate & Mongid, 2023; Budhathoki *et al.*, 2024).

In the context of credit disbursements, banks frequently encounter instances where borrowers are unable to repay their loans in a timely manner. This may be attributed to several factors, including the borrower's inability to maintain timely repayments or the classification of the loan as a NPL (Abrianti & Jumono, 2020). It is imperative to monitor the level of NPLs because elevated NPLs can jeopardize the stability of the banking system (Octaviani & Andriyani, 2018). To anticipate an increase in credit risk, banks attempt to pursue profits by raising interest rates on loans. This exacerbates the difficulty of debtors repaying their loans (Hermanto & Anita, 2022). The relationship between the prime lending rate on loans and NPL is a topic of considerable interest in the context of the banking sector stability and credit risk management. The prime lending rate on loans is often regarded as the benchmark rate at which banks extend credit to those with the greatest creditworthiness.

Ekanayake and Azeez (2015) demonstrated a positive correlation between the prime lending rate and the NPL ratio, indicating that higher credit interest rates may lead to an increase in the NPL rate. This finding is consistent with that of Khouangvichit (2024), who demonstrates that credit interest rates exert a positive and significant influence on long-term NPL. Similarly, Nadham and Nahid (2015) indicated that interest rates influence NPL rates. In conclusion, the reviewed literature indicates that primary lending rates have a positive impact on NPLs. Higher interest rates can potentially increase borrowing costs and lead to difficulties in loan repayment, thereby increasing the NPL rate (Khouangvichit, 2024; Ekanayake & Azeez, 2015; Nadham & Nahid, 2015).

H1: The level of Prime Lending Rate has a positive effect on the Non-Performing Loans

The Effect of Prime Lending Rates (PLR) on Bank Performance

Legitimacy theory posits that organizations endeavor to establish congruence between their actions and the norms and expectations of the wider community. In the context of interest rates and credit performance, the theory suggests that banks should adjust their prime lending rate to align with stakeholder expectations and regulatory standards, thereby maintaining legitimacy and potentially enhancing performance (Uduma, 2021; Mukasekuru, 2022).

A reduction in the standard variable bank rate (SVR) results in a corresponding reduction in borrowing costs. This is likely to stimulate demand for credit, which may in turn prompt banks to expand their loan offerings, leading to an increase in the loan-to-deposit ratio (LDR). Interest rates influence both consumers and businesses' decisions to take out loans. An increase in the interest rate on loans results in a decrease in the number of individuals seeking credit and vice versa. Furthermore, interest rates exert a significant and positive influence on inflation, which suggests that higher interest rates may reduce the propensity to borrow, potentially impacting the LDR (Chantha *et al.*, 2024; Dewianawati *et al.*, 2022). Additional research has also identified a significant relationship between interest rates and loan repayments, indicating that changes in interest rates on loans can impact the credit quality portfolios, and consequently, the LDR (Ogundipe *et al.*, 2020).

Furthermore, return on asset (ROA) is a measure of the efficiency with which a bank utilizes its assets to generate profits. A decline in the PLR will enable banks to distribute loans more effectively, resulting in a higher growth rate of total loans than that of total third-party funds. Consequently, bank profits increase, leading to an increase in ROA (Kusumaningrum & Iramani, 2020; Bhattarai, 2017; Oriavwote & Oyovwi, 2014).

Additionally, the net interest margin (NIM) represents the difference between the interest earned on loans and investments, and the cost of funding. A higher interest rate on loans tends to increase the spread of interest rates because the income generated by the bank from lending is greater than the cost of funding from depositors and other sources. Previous studies have indicated that negative market interest rates may result in an increase in net interest margins (NIM) for banks in the Eurozone, as banks adjust their business practices when serving new loans. This indicates that, in certain instances, higher loan interest rates, which are often linked to primary credit rates, can result in a decline in NIM (Klein, 2020; Kristyono, 2019; Hoang-Trung & Vu Thi Dan, 2015; Putri & Yafiz, 2023).

H2a: The level of PLR has a negative effect on the loan-to-deposit ratio (LDR)
H2b: The level of PLR has a negative effect on the return on assets (ROA)
H2c: The level of PLR has a negative effect on the net interest margin (NIM)

The Effect of Non-Performing Loans (NPL) to Bank Performance

Legitimacy theory posits that organizations endeavor to ensure that their actions are perceived as legitimate within the context of the social environment in which they operate. In the context of credit difficulties (NPL) and banking performance, legitimacy theory suggests that banks seek to maintain their legitimacy by effectively managing NPL. High NPL rates may indicate poor risk management and assessment practices, which have the potential to erode stakeholder confidence and a bank's reputation (Tarchouna *et al.*, 2020).

Firstly, regarding the LDR, the presence of NPL exerts a negative influence on the LDR. The impact of NPL on the loan-to-deposit ratio (LDR) is a subject of considerable interest within the banking sector. LDR represents a measure of a bank's

liquidity, indicating the proportion of customer deposits extended as loans. A lower LDR indicates that the bank has greater liquidity and is less reliant on loans as a source of revenue (Wahyuni *et al.*, 2023). Previous research also indicates that a high level of NPL has a negative effect on financial performance due to a reduction in interest income. Furthermore, low LDR can result in an increase in liquidity and idle funds, which can negatively impact financial performance (Kesaulya *et al.*, 2021).

Furthermore, regarding the performance indicator Return on Assets (ROA), NPL tend to generate unpaid or delayed interest income, which ultimately results in a reduction in a bank's interest income. Moreover, an increase in NPLs results in an increased provision of losses for banking institutions. Both these factors result in a reduction in banks' net income and ROA. Previous research has demonstrated that NPL has a negative impact on profitability (return on assets) (Wahyuni *et al.*, 2023; Yuttama, 2024).

The ratio of NPL indicates the level of problematic loans held by the banks. A high NPL ratio can lead to a reduction in the bank's interest income (Nugrahaning & Wahyudi, 2016). The presence of NPL on a bank's balance sheet can have a detrimental impact on the net interest margin (NIM), which is a measure of the difference between a bank's interest income and the interest paid to lenders, relative to the interest-bearing assets held (Endri *et al.*, 2020). Previous research has demonstrated that NPL negatively influences NIM. This suggests that an increase in NPLs may result in a reduction in a bank's net interest margin (NIM) (Endri *et al*., 2020).

H3a: The level of non-performing loans (NPLs) has a negative effect on the loan-to-deposit ratio (LDR)

H3b: The level of NPLs has a negative effect on the return on assets (ROA)

H3c: The level of non-performing loans (NPLs) has a negative effect on the bank's net interest margin (NIM)

The Effect of Prime Lending Rate on Banking Performance through NPLs

The relationship between the Prime Lending Rate (PLR) and bank performance is multifaceted. Ujuju and Etale (2016) demonstrate that the Prime Lending Rate (PLR) has a negative relationship with commercial bank lending in Nigeria, suggesting that a higher PLR may discourage lending activities. Similarly, Khairufi and Wibowo (2022) find that changes in the Prime Lending Rate can affect banks' lending behavior. Hong (2017) also supports the notion that an increase in NPL, which may be influenced by higher Prime Lending Rate, negatively impacts bank profitability and lending behavior.

The magnitude of the NPL rate warrants consideration, as a high NPL rate can jeopardize bank health (Octaviani & Andriyani, 2018). To anticipate increased credit risk, banks may attempt to pursue profits by increasing lending rates, which, in turn, may impede debtors' ability to repay credit (Hermanto & Anita, 2022). Previous research conducted by Hermanto and Anita (2022) found that, in anticipation of increased credit risk, banks will attempt to pursue profits by increasing lending rates, which may impede debtors' ability to repay credit. Conversely, research conducted by Nugrahaning &

Wahyudi (2016) find that NPLs negatively impact profitability (ROA). Furthermore, if the level of NPLs owned by the bank is high, this condition reduces the level of bank interest income (Nugrahaning & Wahyudi, 2016).
H4a: PLR has a negative effect on LDR through NPLs
H4b: PLR has a negative effect on ROA through NPLs
H4c: PLR has a negative effect on NIM through NPLs

Based on the development of the hypothesis above, this study uses the following research model:

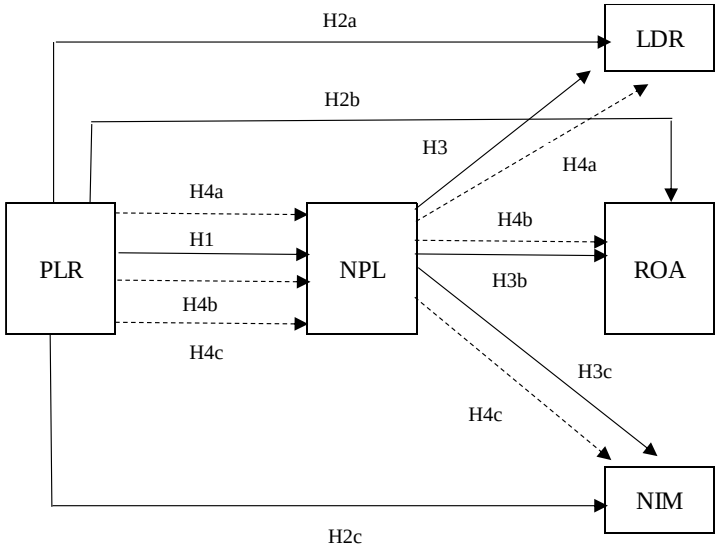

Notes:
Direct Effect
Mediation Effect

Figure 2. Research Model

RESEARCH METHODOLOGY

This research is a quantitative study that has the nature of testing the relationship / influence between research variables, with the aim of analyzing the relationship both statistically, theoretically, and empirically with a descriptive approach. The population of this study were all conventional banks listed on the IDX from 2019 - 2023.

Data collection in this study uses secondary data, namely data obtained by collecting and recording directly from published annual financial reports from Bank Indonesia in the Indonesian Banking Directory (www.bi.co.id) and publication reports on financial ratio calculations from the Financial Services Authority (www.ojk.go.id). In addition to secondary data, this research data was also obtained through literature studies, such as books, previous research publications, and published scientific articles.

The data analysis technique is a mediation regression analysis model using the EViews 13 tool because it uses conventional banking sector panel data for five years from 2019 - 2023 as many as 43 conventional banks listed on the IDX with a total sample

of 215 data. The researcher employs EViews for this study because it offers a flexible platform for empirical analysis with comprehensive data visualization and model estimation capabilities, which makes it particularly well-suited for time-series cross-sectional data. The significance value used in this study uses 3 parameters (10%, 5% and 1%), if the significance value of the t test < the significance parameter, this means that there is a partial influence between the independent variable and the dependent variable (Bräuninger & Thomschke, 2019).

Table 1.
Variable Measurement

Variable(s)			Formulas	Reference
Prime Lending Rates	PLR	=	Cost of Loanable Fund (CoLF) + Overhead Cost (OC) + Profit Margin	Indonesian financial services authority (2021)
Credit Quality	NPL	=	Total non-performing loans / Total loans outstanding	Indonesian financial services authority (2021)
Bank Performance	ROA	=	Net Margin / Total Assets	Indonesian financial services authority (2021)
	NIM	=	Net Interest Income / Average Earning Assets	Indonesian financial services authority (2021)
	LDR	=	Total loans outstanding / Total Third Party Funds	Indonesian financial services authority (2021)

Source: Indonesian financial services authority (2021) https://ojk.go.id/id/regulasi/Pages/Rencana-Bisnis-Bank-Umum.aspx

The decision to reject or not reject the null hypothesis also depends on the context of the study and the significance threshold (alpha level) that has been previously set. Many studies use 0.05 or 0.01, but in some contexts (e.g., early exploration or fields with a lot of variability), 0.1 is acceptable (Kahneman et al, 2013). In many social sciences and econometric studies, a p-value threshold of 0.1 is often considered as a measure of statistical significance. This threshold allows researchers to capture marginally significant results that might indicate meaningful trends or associations, even if they do not meet the conventional 0.05 level (Wasserstein & Lazar, 2016). A significance level of 0.1 is especially useful in exploratory studies or fields where variability is high, allowing researchers to detect effects that might otherwise be overlooked, thus fostering further investigation and refinement of hypotheses (Yamamura, 2016).

It is necessary to have PLR in place as an indicator of the interest rate that will be applied to customers who apply for credit with the bank. It is therefore essential that the PLR encompasses all credit segments offered by the Bank to customers, including corporate, retail, micro, and consumption loans (both household loan credit and non-household loan credit). As stated by Bank Indonesia, the implementation of transparency

regarding PLR is an initiative to enhance good governance and foster fair competition within the banking industry, particularly through the establishment of superior market discipline.

In accordance with Circular Letter No. 9/SEOJK.03/2020 issued by the Financial Services Authority of Indonesia, the NPL ratio is calculated by comparing the total amount of impaired loans with the total amount of loans granted. In accordance with Regulation No. 17/11/PBI/2015 issued by Bank Indonesia, a banking institution with an NPL ratio exceeding 5% of the total credit portfolio is deemed to possess the potential for significant challenges in debt collection, which could ultimately jeopardize the operational stability of the banking entity.

In this study, three dependent variables (banking financial performance) were investigated: return on assets (ROA), net interest margin (NIM) and loan to deposit ratio (LDR). An analysis of profitability may be employed to evaluate the performance of a given company (Titman et al., 2018). The return on asset (ROA) ratio is a financial ratio that indicates the profitability of a company's assets. An increase in a bank's ROA indicates an increase in the profitability of the bank (Pham & Le, 2024; Bazimya & Erorita, 2024). Secondly, the net interest margin (NIM) ratio is employed to assess the capacity of banking management in managing productive assets to generate net interest income (Yao et al., 2018; De Silva et al., 2020; Putri & Yafiz, 2023). Finally, the loan-to-deposit ratio is utilized to evaluate the ability of banking institutions to meet short-term liquidity obligations, calculated by dividing total loans by third-party deposits (Awaluddin et al, 2023).

RESULT

Table 2 presents the descriptive statistics for each variable. It is acknowledged that the number of observations is 215 samples from the annual reports of the banking sector listed on the Indonesia Stock Exchange (IDX) for the period 2019-2023. The following is a description of the interpretation of the descriptive analysis: Firstly, the variable of interest, the prime lending rate (PLR), exhibited a range of 6.29% to 15.11%. The overall mean value is 10.3122. The data on the prime lending rate (PLR) indicates that the interest rates on loans in the conventional banking industry listed on the Indonesia Stock Exchange exhibit a considerable range, reflecting intense competition among banks for loan business.

Secondly, the NPL variable ranged from 0.05% to 22.27%. The elevated NPL ratio observed in Bank Banten Tbk is largely attributed to the presence of significant NPL in the corporate sector. The overall mean of the NPL variable is 3.2634%. The standard deviation is 2.6801, with a median value of 2.78%.

Furthermore, the LDR variable ranges from 12.31% to 483.05%. The lowest value of 12.31% was observed in the banking sector in 2021, as represented by Bank Capital Indonesia Tbk. The low ratio of LDR is thought to be the result of the impact of the global pandemic, which has encouraged people to save rather than borrow, given the

general economic slowdown. The highest value for the LDR was observed in 2023, reaching 483.04% in Krom Bank Indonesia Tbk. The economic recovery following the pandemic of the novel coronavirus (Covid-19) and the injection of capital from the new owner, Kredivo, led to an increase in the amount of credit extended, resulting in an elevated level of the loan-to-deposit ratio (LDR). The overall mean value of the LDR was found to be 89.18%. The standard deviation was 48.08, with a median value of 80.76.

Table 2.
Statistical Description of Research Variables

	PLR	NPL	LDR	ROA	NIM
Mean	10.3122	3.2634	89.1895	0.3667	4.4348
Median	10.2500	2.7800	80.7600	0.5700	4.3000
Maximum	15.1100	22.2700	483.0500	4.1400	22.5100
Minimum	6.2900	0.0500	12.3200	-18.0600	-5.1700
Std. Dev.	1.8011	2.6801	48.0825	2.4067	2.9904
Observations			215		

Source: Results of researcher statistical data (2024)

The range of ROA variables is -18.06% to 4.14%. The lowest banking value was observed in Bank Raya Indonesia Tbk in 2021, at -18.06%. The considerable level of NPL at Bank Raya led to an increase in the provision for impairment losses of Rp 3.8 trillion, resulting in a net loss for the bank in 2021. Conversely, the highest value of ROA was observed in Allo Bank Indonesia Tbk in 2021, at 4.14%. The overall mean of the ROA variable is 0.3667%. The standard deviation is 2.4067, while the median value is 0.57%.

Lastly, the net interest margin (NIM) variable in this study exhibited a range of -5.17% to 22.51%. The lowest value was observed in Bank Capital Indonesia Tbk in 2021, with a negative figure of -5.17%. The highest value was observed in 2023, at 22.51%, in Bank Amar Indonesia Tbk. The observation indicates that banks with high NIMs typically operate in the retail credit and SME lending segments, where interest rates are set at a premium. The overall mean of the NIM variable is 4.4347%, with a standard deviation of 2.99 and a median value of 4.2979%.

Multicollinearity Test

The test of multicollinearity is employed to ascertain whether there is collinearity between the independent variables within a given regression model. The purpose of table 3 is to ascertain whether a perfect or near-perfect linear relationship exists between the independent variables in a regression model.

Table 3.
Correlation between variables

	PLR	NPL	LDR	ROA	NIM
PLR	1.0000				
NPL	0.1260	1.0000			

	PLR	NPL	LDR	ROA	NIM
LDR	0.1515	-0.0722	1.0000		
ROA	-0.2222	-0.3625	0.1619	1.0000	
NIM	-0.0376	-0.1683	0.4149	0.2575	1.0000

Source: Results of researcher statistical data (2024)

An optimal regression model is one in which there is no correlation between the independent variables and no evidence of multicollinearity. The correlation results indicate that no variable exhibits a correlation exceeding 0.70, suggesting that the research variables are not subject to multicollinearity issues. Consequently, the regression analysis may proceed. In this study, the researcher elects to refrain from conducting an autocorrelation test, as this is not a primary focus in the context of panel models, particularly fixed-effects and random-effects models. These models tend to prioritize the examination of unobserved heterogeneity across entities, rather than temporal correlations within individual entities over time (Wooldridge, 2019).

Hypotheses Test

Prime Lending rate (PLR) and Credit Quality (NPL)

The findings of the research indicate that PLR has a positive effect on NPL. An increase in the interest rate on loans will make it more difficult for borrowers to repay their debts. An increase in the interest rate on loans will result in a corresponding rise in the burden of interest payments borne by the borrower. This can result in difficulties for borrowers in meeting their loan repayment obligations, particularly those with fixed income or income that does not increase in line with interest rate rises, or those with high debt-to-income ratios. Furthermore, the findings of this study align with those of previous research, namely Ekanayake & Azeez (2015). Khouangvichit (2024). The studies conducted by Nadham and Nahid (2015) and Khouangvichit (2024), as well as those by Ekanayake & Azeez (2015) and Nadham & Nahid (2015).

Table 4.
Hypothesis (Direct Effect)

	NPL		LDR		ROA		NIM	
Variable	**Coef.**	**Prob.**	**Coef.**	**Prob.**	**Coef.**	**Prob.**	**Coef.**	**Prob.**
C	-2.5765	0.0246	31.0849	0.1013	1.6355	0.0000	4.4657	0.0001
PLR	0.5663	0.0000***	6.3842	0.0005***	-0.073	0.0007***	0.051	0.6276
NPL			-2.3687	0.0466**	-0.1582	0.0000***	-0.1707	0.0136**
Effect	Fixed Effect Model		Random Effect Model		Fixed Effect Model		Random Effect Model	
R Squared	0.6767		0.0596		0.8846		0.0291	
Prob(F-statistic)	0.0000		0.0015		0.0000		0.0438	
N	215		215		215		215	
Hypothesis	Hypothesis 1		Hypothesis 2a & 3a		Hypothesis 2b & 3b		Hypothesis 2c & 3c	

*Notes: Prob: *<0.10; **<0.05; ***<0.01*
Source: Results of researcher statistical data (2024)

.

Table 5.
Hypothesis (Direct Effect)

Hypotheses	Mediation Effect	Std. Error	t-Statistic	Prob.
Hypothesis 4a	PLR --> NPL --> LDR	0.7188	-1.8662	0.0620*
Hypothesis 4b	PLR --> NPL --> ROA	0.0226	-3.9639	0.0001***
Hypothesis 4c	PLR --> NPL --> NIM	0.0431	-2.2419	0.0250**

*Notes: Prob: *<0.10; **<0.05; ***<0.01*
Source: Results of researcher statistical data (2024)

DISCUSSION

Prime Lending rate (PLR) and Bank Performance (LDR, ROA, NIM)

Based on table 4, the results of the study indicate a positive effect of PLR on LDR. The positive effect of PLR on LDR is likely due to the improved economic conditions in Indonesia following the covid-19 pandemic, coupled with the fact that the PLR increase remains within an acceptable range. Consequently, customers remain inclined to borrow from banks, resulting in sustained high levels of credit. Furthermore, despite the potential for higher interest rates to reduce demand for credit, borrowers may still opt for loans if they require funds urgently or if the interest rates remain competitive in comparison to the potential returns from business operations. Furthermore, the results of this study are consistent with those of previous studies (Chantha et al., 2024; Dewianawati et al., 2022; Ogundipe et al., 2020).

In contrast, the results of the study on the relationship between PLR and ROA indicate that there is a negative effect of PLR on ROA. A reduction in PLR will enable banks to channel credit effectively, resulting in a higher growth rate in total credit disbursed than in total third-party funds. This will lead to an increase in bank profits, and consequently, an improvement in ROA. The results of this study are in accordance with those of previous study (Kusumaningrum & Iramani, 2020; Bhattarai, 2017; Oriavwote & Oyovwi, 2014).

Conversely, PLR has no impact on NIM. The findings of this study indicate that an increase in credit interest rates does not necessarily result in a corresponding rise in the net interest margin (NIM) of banks. This is likely since when interest rates on loans increase, banks must also adjust their deposit interest rates to remain competitive in the market. An increase in the interest rate on deposits will result in a higher cost of funds for banks, which will be passed on to depositors. Should the increase in funding costs be greater than or equal to the rise in credit rates. It is possible that the net interest margin (NIM) of the banking institution will remain unaffected. The results of this study align with those of previous research (Klein, 2020; Kristyono, 2019; Hoang-Trung & Vu Thi Dan, 2015; Putri & Yafiz, 2023).

Credit Quality (NPL) and Bank Performance (LDR, ROA, NIM)

The results of the study indicate that NPL exerts a negative influence on LDR. Return on assets (ROA) and net interest margin (NIM). An increase in NPLs results in a reduction in the funds that would otherwise be available for new credit facilities. To address the issue of non-performing loans, banks must set aside a greater proportion of their capital, which subsequently reduces the amount of funds available for new lending. An NPL indicates that the loan has not generated the expected interest income (thereby resulting in a decline in NIM and ROA). Interest income represents a significant source of revenue for banking institutions. A decline in interest income can impact a bank's liquidity and its capacity to extend new loans (LDR decreases). To mitigate the potential losses associated with NPLs, banks must enhance their loan loss provisioning (LLA). This signifies that a portion of the existing funds are allocated to offset potential losses, which subsequently reduces the liquidity and capacity of the bank to extend credit. The findings of this study align with those of previous research (Endri et al., 2020; Kesaulya et al., 2021; Wahyuni et al., 2023; Yuttama, 2024)

Prime Lending Rate (PLR), Credit Quality (NPL) and Bank Performance (LDR, ROA, NIM)

The results of the study indicate that PLR has a negative effect on LDR. Return on assets (ROA) and net interest margin (NIM) are influenced by the level of non-performing loans (NPL). High interest rates on loans result in higher repayment burdens for borrowers, thereby increasing the risk of default (NPL). Consequently, banks are required to set aside greater funds for provisions for losses (LLA), which reduces the capital available for new lending. A reduction in the ratio of loans to deposits (LDR) is inevitable when banks have limited funds available for lending.

Based on Table 5, high PLR can lead to increased interest income for the bank, which in turn can result in an elevated ROA. However, this does not consider the increased credit risk that is generated. An increase in NPLs resulting from a rise in PLR can have a detrimental impact on a bank's profitability. This indicates that, despite the potential for increased interest income, the adverse impact of higher NPLs on ROA may outweigh the positive effect. An increase in NPLs results in a reduction in interest income due to the repayment of loans that do not accrue the expected interest. A reduction in interest income resulting from high NPLs will also lead to a decline in the net interest margin (NIM) of the banking sector. This finding aligns with the conclusions of previous studies (Ujuju & Etale, 2016; Khairufi & Wibowo, 2022; Hong, 2017; Hermanto & Anita, 2022; Nugrahaning & Wahyudi, 2016).

CONCLUSION

The results of the research indicate that there are nine studies that have an impact and one study that has no impact. The PLR does not have an impact on NIM. Of the nine studies that yielded statistically significant results, five had a p-value of less than 0.01,

three had a p-value of less than 0.05, and one had a p-value of less than 0.10. This latter study demonstrated that PLR affects LDR through NPL. The results of another study demonstrated that PLR had a positive effect on NPL and LDR, but a negative effect on ROA and no effect on NIM. In contrast, NPL exerts a negative influence on LDR, ROA and NIM. This can be explained by the fact that when NPLs increase, the funds that would otherwise be available for new loans are reduced (LDR falls). Furthermore, non-performing loans (NPLs) tend to generate unpaid or delayed interest, which results in a decline in banking institutions' interest income (NIM) and an increase in provisions for losses (LLA), leading to a reduction in net income and return on assets (ROA) for these institutions. The results of the mediation test indicate that PLR has a negative effect on LDR, ROA and NIM through NPL. High PLR levels result in higher repayment burdens for borrowers, increasing the risk of default (NPL). This, in turn, leads to a decline in interest income due to a higher proportion of loans that are not paid as expected (NIM decreases). Furthermore, an increase in NPL necessitates a greater provision for loan losses (LLA), reducing the funds available for new loans (LDR decreases), which ultimately results in a reduction in the net income and ROA of the banking institution.

The study was conducted over a five-year period (2019–2023), a period during which the global economy was affected by the pandemic caused by the SARS-CoV-2 virus, resulting in a global economic recession that also affected Indonesia. Consequently, the results of this study may be somewhat inaccurate due to the presence of biased banking data. It is therefore recommended that future researchers extend the duration of their studies to more than five years to achieve greater accuracy, for example by comparing their findings with those of previous studies conducted before the pandemic. Following the pandemic, the results of the study will be clearer and more accurate, and can be implemented in the form of recommendations that are not only normative.

The banking sector dominates approximately 75% of Indonesia's financial transactions. Therefore, considering the above research findings indicating that PLR affects NPL and banking performance, it is imperative for regulators (Central bank of Indonesia and Indonesian Financial Services Authority) to exercise greater caution in issuing regulations, particularly in regard to monetary policy, while also strengthening their supervisory role over the banking sector to ensure the sustained low level of NPLs. It is recommended that banking practitioners refrain from solely pursuing high net interest margin (NIM), return on assets (ROA), and loan-to-deposit (LDR) ratios, and instead adopt a more cautious approach in extending credit to maintain an NPL ratio below 5%. This will ensure the continued financial stability of the banking institutions in question.

An understanding of the impact of prime lending rates on credit quality is beneficial to banks in setting competitive yet sustainable lending rates. This insight facilitates the management of loan demand and the prevention of high-risk lending, thereby maintaining healthier NPL ratios. As indicated in the study, elevated lending rates can intensify credit risk by impeding borrowers' capacity to repay loans. This

indicates that a cautious methodology for establishing interest rates can contribute to the stability of loan portfolios and the protection of profitability. For policymakers, the study offers insights into the broader effects of interest rate changes on banking stability and credit quality in emerging markets. Financial regulators, such as Bank Indonesia, could utilize these findings to develop policies that balance economic growth objectives with financial stability. For instance, they could implement measures to maintain NPLs below critical thresholds during periods of fluctuating interest rates. These implications encourage a balanced approach to managing interest rates, focusing on credit quality, and maintaining consistent performance to ensure long-term financial stability.

REFERENCES

Abrianti, & Jumono, S. (2020). Analisis Faktor Internal dan Eksternal yang Mempengaruhi Non-Performing Loan pada Bank Campuran di Indonesia (Periode 2012-2017). *JCA Ekonomi*, 1. https://jca.esaunggul.ac.id/index.php/jeco/article/view/72

Awaluddin, M. R., Haliah, H., & Kusumawati, A. (2023). The Effects of Non-Performing Loan and Loan to Deposit Ratio toward Return on Asset. *International Journal of Humanities Education and Social Sciences*, 2(6). https://doi.org/10.55227/ijhess.v2i6.501

Bazimya, S., & Erorita, D. (2024). Analyzing the Financial Performance of Manufacturing Firms: A Focus on Return on Equity, Return on Assets and Return on Sales. *The International Journal of Humanities & Social Studies*. https://doi.org/10.24940/theijhss/2024/v12/i6/hs2406-005

Central Bank of Indonesia. (2024*). Monetary Policy Review May 2024.* Central Bank of Indonesia. Retrieved from www.bi.go.id

Chantha, K., Seng, S., Ratha, P., & Sovanvatthana, K. (2024). An integrated analysis of key financial metrics driving commercial bank performance in Cambodia. *International Journal of Advanced Economics*, *6*(10), 517–543. https://doi.org/10.51594/ijae.v6i10.1632

Bhattarai, Y. R. (2017). Determinants of Lending Interest Rates of Nepalese Commercial Banks. *Economic Journal of Development Issues*, *19*, 39–59. https://doi.org/10.3126/ejdi.v19i1-2.17701

Bräuninger, M., & Thomschke, C. (2019). *Econometrics with EViews*. Springer.

Budhathoki, P. B., Upadhyaya, Y. M., & Bhattarai, G. (2024). Does Interest Rate Impact Economic Growth? Empirical Insight from Nepal. *Nepal Journal of Multidisciplinary Research*. *7*(1). 97–110. https://doi.org/10.3126/njmr.v7i1.65253

De Silva, D. S. P. N., Azam, S. M. F., & Chinna, K. (2020). The Influence of Net Interest Margin (NIM) on Profitability of Sri Lankan Banking Industry. *Global Journal of Management and Business Research*, 25–28. https://doi.org/10.34257/gjmbrbvol19is7pg25

Deegan, C. (2019). *Financial accounting theory* (5th ed.). McGraw-Hill Education.

Dewianawati, D., Purwanto, F., & Setiawan, E. (2022). The Effect of Financial Ratio and Interest Rate of Bank on Working Capital Loan Distribution (Study on Commercial Banks Listed in The Indonesia Stock Exchange for The Period 2017 – 2021). *Indonesian Journal of Business Analytics*, *2*(1), 41–56. https://doi.org/10.55927/ijba.v2i1.72

Ekanayake, M. N. N., & Azzez, A. A. (2015). Determinants of Non-Performing Loans in Licensed Commercial Banks: Evidence from Sri Lanka. *Asian Economic and Financial Review*. 5(6). 868–882. https://doi.org/10.18488/journal.aefr/2015.5.6/102.6.868.882

Endri, E., Hurriyaturrohman, H., & Marlina, A. (2020). Impact of internal and external factors on the net interest margin of banks in Indonesia. *Banks and Bank Systems*. *15*(4). 99–107. https://doi.org/10.21511/bbs.15(4).2020.09

Fadhillah, I.R., Nadiyah, Rohmah, L., Haryadi, D., Wahyudi, W. (2024). Profitability ratio analysis to assess the financial performance. *International Journal of Applied Finance and Business Studies, 11(4), pp. 964-969.* https://doi.org/10.35335/ijafibs.v11i4.243

Ghozali, I & Chariri, A. (2022). *Teori Akuntansi Edisi 3.* Undip Press: Semarang

Goyal, S., Singhal, N., Mishra, N., & Verma, S. K. (2023). The impact of macroeconomic and institutional environment on NPL of developing and developed countries. *Future Business Journal*. 9(45). https://doi.org/110.1186/s43093-023-00216-1

Hermanto, H., & Anita. A. (2022). Pengaruh Dana Pihak Ketiga Dan Non-Performing Loan Terhadap Profitabilitas Dengan Rasio Intermediasi Makroprudensial Sebagai Variabel Intervening. *Jurnal Pendidikan Akuntansi Indonesia*. *20*(1). 76–87. https://doi.org/10.21831/jpai.v20i1.50591

Hoang-Trung, K., & Vu Thi Dan, T. (2015). Determinants of Net Interest Margin of Commercial Banks in Vietnam. *Journal of Economics and Development*, 69–82. https://doi.org/10.33301/2015.17.02.04

Hong, V. (2017). The impact of non-performing loans on bank profitability and lending behavior:Evidence from Vietnam. *Journal of Asian Business and Economic Studies*. 24. 27-44. https://doi.org/10.24311/jabes/2017.24.3.06.

Indonesian Financial Services Authority. (2021). *Surat Edaran Otoritas Jasa Keuangan Republik Indonesia Nomor 12 /SEOJK.03/2021 Tentang Rencana Bisnis Bank Umum*. Indonesian Financial Services Authority. https://ojk.go.id/id/regulasi/Documents/Pages/Rencana-Bisnis-Bank-Umum/seojk%2012-2021.pdf

Indonesian Financial Services Authority. (2019). *POJK No.40/POJK.03/2019 Tentang Penilaian Kualitas Aset Bank Umum.* Indonesian Financial Services Authority. *53*(9). 1689–1699. https://www.ojk.go.id/id/regulasi/Documents/Pages/Penilaian-Kualitas-Aset-Bank-Umum/pojk 40-2019.pdf

Jazmiyanti, N., Cahyono, E. F., & Kassim, S. H. (2024). Is There a Relationship Between Islamic Banking Liquidity and Inflation? Empirical Evidence from Indonesia. *Ekonomi Islam Indonesia*, 6(1). https://doi.org/10.58968/eii.v6i1.406

Kahneman, D., Slovic, P., & Tversky, A. (2013). *Judgment under Uncertainty: Heuristics and Biases.* Cambridge University Press: United Kingdom https://doi.org/10.1017/CBO9780511809477

Kesaulya, F. A., Khairunnisa, K., & Putri, W. (2021). Pengaruh Non-Performing Loan (NPL) dan Loan to Deposit Ratio (LDR) terhadap Kinerja Keuangan Perbankan. *Global Financial Accounting Journal*. *5*(2). 148. https://doi.org/10.37253/gfa.v5i2.6087

Khairufi, R., & Wibowo. B. (2022). Long-run relationship of prime lending rate toward reference rate of monetary authority in Indonesia. *Contemporary Research on Management and Business*, (pp. 200–203). crc. https://doi.org/10.1201/9781003295952-51

Khouangvichit, C. (2024). The relationship between macroeconomic factors and non-performing loans (NPLs) in Lao PDR (pp. 154–173). *Green and Digital Transitions*. https://doi.org/10.14232/gtk.gdtgiss.2024.10

Klein, M. (2020). Implications of Negative Interest Rates for the Net Interest Margin and Lending of Euro Area Banks. *SSRN Electronic Journal*. https://doi.org/10.2139/ssrn.3581062

Kristyono, H. (2019). *The Effect of Loan to Deposit Ration. BOPO.* Non-Perform- Loan. and Net Interest Margin Against Lending Rate Base. *Master's thesis, STIE Perbanas Surabaya.* https://eprints.perbanas.ac.id/6324

Kusumaningrum, D. R., & Iramani, I. (2020). Effect of Financial Performance on Stock Price with Return on Assets as an Intervening Variable in State-Owned Banks in Indonesia. *International Journal of Multicultural and Multireligious Understanding*, 7(2), 321. https://doi.org/10.18415/ijmmu.v7i2.1485

Maulana, P.W., Hardiwinoto. H., & Kristiana, I. (2024). Integrity of Financial Statements Reviewed from Corporate Governance, Leverage, and Company Size. *Economics and Business International Conference Proceeding*, 1(2), 406-413.

Modugu, K. P., & Dempere, J. (2022). Monetary policies and bank lending in developing countries: evidence from Sub-Sahara Africa. *Journal of Economics and Development*, 24(3), pp. 217-229. https://doi.org/10.1108/JED-09-2021-0144

Mukasekuru, Y. S. (2022). Lending Rate Practices and Financial Performance of Commercial Banks in Rwanda. A Case of I&M Bank Plc. *Journal of Finance and Accounting*. *6*(3). 97–118. https://doi.org/10.53819/81018102t4066

Nadham, V., & Nahid, B. (2015). Determinants of Non-Performing Loans in Commercial Banks. *International Journal of Finance & Banking Studies (2147-4486)*. *4*(1). 70–94. https://doi.org/10.20525/ijfbs.v4i1.206

Nugrahaning, S., & Wahyudi, S. (2016). Analisis Pengaruh NPL dan LDR terhadap NIM dengan ROA sebagai Intervening, Pengaruh NPL terhadap NIM dengan CAR dan ROA sebagai Intervening, serta BOPO terhadap NIM Bank Go Public di Indonesia Periode 2011-2015. *Diponegoro Journal of Management*, 5(4), 76–84. https://ejournal3.undip.ac.id/index.php/djom/article/view/17881

Octaviani, S., & Andriyani, Y. (2018). Pengaruh Non-Performing Loan (NPL) dan Loan to Deposit Ratio (LDR) terhadap Profitabilitas pada Perusahaan Perbankan yang Terdaftar di Bursa Efek Indonesia (BEI). *Jurnal Akuntansi : Kajian Ilmiah Akuntansi (JAK)*, 5(1), 64. https://doi.org/10.30656/jak.v5i1.504

Ogundipe, A. S., Olaoye, D. S. A., & Akintola, D. A. F. (2020). Interest Rates and Loan Performance of Deposit Money Banks in Nigeria. *EPRA International Journal of Economic and Business Review*, A13-A20. https://doi.org/10.36713/epra3014

Oriavwote, V., & Oyovwi, D. (2014). Interest Rate and Investment Decision in Nigeria: A Cointegration Approach. *American Journal of Business and Management*, *3*(1), 21–27. https://doi.org/10.11634/216796061706519

Pham, V. H. S., & Le, T. D. (2024). Research on Applying Machine Learning Models to Predict and Assess Return on Assets (ROA). *Research Square Platform LLC.* https://doi.org/10.21203/rs.3.rs-4129810/v1

Putri, R. N., & Yafiz, I. A. (2023). The Effect of Internet Banking, Size, NPL and CAR on Net Interest Margin (NIM) and Banking Efficiency in Indonesia During Covid-19 Pandemic. *International Journal of Economic, Business & Applications*, *8*(1), 69–90. https://doi.org/10.31258/ijeba.84

Souza, J. A. E., Mendonça, D. J., Benedicto. G. C. D., & Carvalho. F. D. M. (2017).

Aplicação da análise fatorial para identificação dos principais indicadores de desempenho econômico-financeiro em instituições financeiras bancárias. *Revista Catarinense Da Ciência Contábil*. *16*(47). 25–39. https://doi.org/10.16930/2237-7662/rccc.v16n47p26-41

Tarchouna. A., Jarraya. B., & Bouri. A. (2020). Non-performing loans and bank corporate governance: conceptual framework and literature review. *International Journal of Business Governance and Ethics*. *1*(1). 1. https://doi.org/10.1504/ijbge.2020.10032943

Titman, S., Keown, A. J., & Martin, J. D. (2018). *Financial Management Thirteenth Edition.* In Handbook of Global Supply Chain Management (13th Editi). Pearson.

Uduma, A. M. (2021). Interest Rate Deregulation and Performance of Deposit Money Banks: Time Series Evidence from Nigeria. *Journal of Economics. Finance And Management Studies*. *04*(08). https://doi.org/10.47191/jefms/v4-i8-12

Ujuju. L., & Etale. L. (2016). Determinants of Commercial Bank Lending Policy in Nigeria: An Econometric Approach. *Open Journal of Business and Management*. *5*(04). 89–93. https://doi.org/10.15520/ijbm.vol5.iss4.54.pp89-93

Umaternate. F. F., & Mongid. A. (2023). Modelling Non-performing Loans (NPL) for Small Banks in Indonesia: Are Macroeconomic Matter? *International Journal of Economics. Business and Management Research*. *07*(01). 57–68. https://doi.org/10.51505/ijebmr.2023.7106.

Wahyuni, W., Badollahi, I., Nurhidayah, N., & Mardiastuti, W. (2023). Analyzing the Impact of Non-Performing Loans and Loan-to-Deposit Ratios on Return on Assets: A Study of Conventional Commercial Banks in Indonesia. *Advances in Management & Financial Reporting*. *1*(3). 107–118. https://doi.org/10.60079/amfr.v1i3.124

Wasserstein, R. L., & Lazar, N. A. (2016). The ASA's statement on p-values: Context, process, and purpose. *The American Statistician*, *70*(2), 129-133.

Wooldridge, J. M. (2019). *Introductory econometrics: A modern approach* (7th ed.). Cengage Learning.

Yamamura, E. (2016). The significance of p-values less than 0.1 in exploratory research. *Statistical Research Journal*, *15*(1), 18-27.

Yao, H., Haris, M., & Tariq, G. (2018). Profitability Determinants of Financial Institutions: Evidence from Banks in Pakistan. *International Journal of Financial Studies*, *6*(2), 53. https://doi.org/10.3390/ijfs6020053

Yuttama, F. R. (2024). The Impact of Non-Performing Loans and The BI Rate on Return on Assets. *Jurnal EBI*. *6*(1). 19–26. https://doi.org/10.52061/ebi.v6i1.237